Selas Automatic Firecheck

SAFETY

These instructions pertain only to the Selas Automatic Firecheck series and should only be used for its intended purpose. Only qualified personnel should work on the Firecheck to ensure proper installation, especially when installing gas piping or electrical wiring. All regulations MUST follow/meet region requirements. If unsure about this information, contact your local gas or electric company. This product can cause serious injury/harm if misused. Any person working with the Firecheck should be equipped with proper protective equipment, such as safety glasses, close-toed shoes, and adequate clothing attire. Contact the factory if you have any questions or concerns regarding the Selas Automatic Firecheck series.

Warning: *A flashback can be explosive and dangerous. It is important that these instructions be understood and followed by responsible operating personnel.*

Description: How It Works

The Selas Automatic Firechecks is a specialized safety device that prevents flashbacks in premix combustion systems. It confines flashbacks to a flame screen until heat sensors trigger valve closure. The device includes a shut-off valve, check valve, corrugated fire screen, and thermal latch. The stainless-steel valve stem and bronze bushing ensure noncorrosive, long-lasting operation, providing quick and positive closure to stop gas/air mixture flow.

Additionally, Firechecks are available with self-contained, heavy-duty, splash-proof, or explosion-proof switches, making it dependable in hazardous areas.

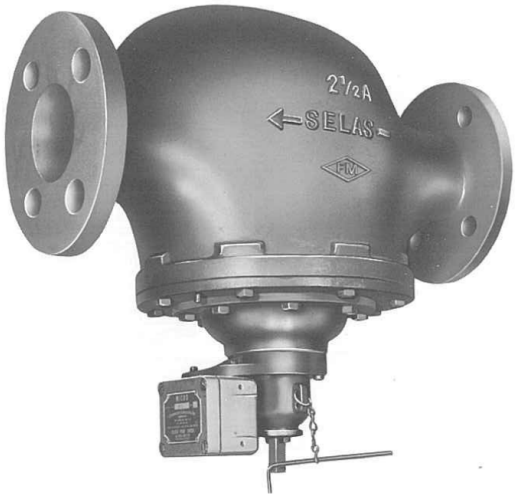

Applications

Selas Automatic Firechecks meet safety requirements on premix combustion systems.

The Heat Technology Company™

Installation

1. Location

For maximum protection, the Selas Automatic Firecheck should be installed in the piping system as close as possible to the burner or other potential backfire starting point. Maximum downstream piping length should be limited to 40 feet (12m) (sizes 8A through 20A), and 20 feet (6m) (size 24A), when used with gases containing up to 40% hydrogen.

For gases with hydrogen content in excess of this value, or for piping configuration which deviates from the above recommendation, contact Selas for advice.

A full-throated gas cock or gate valve should be placed on the inlet side (upstream) of the Firecheck, allowing mixture to be shut off while the valve is being reset or maintained.

NOTE: Factory approval is only valid on the above equipment if the downstream piping is no greater than the pipe size of the Firecheck in piping systems operating up to 6 psig (.42 KG/cm^2).

2. Position

The Firecheck can be installed in any position throughout 360°. The only stipulation is that enough clearance be made available for removal of the cartridge assembly (Nos. 1 through 39, Fig. 1). (Clearance requirements given in Dimension H). Installations with the reset stud (No. 20) pointing down require additional force to overcome the weight of the check valve (No. 34). For this reason, capacities for such applications will be approximately 80% of those shown on the graph in Fig. 2.

3. Wiring

Series AFS-A and AFSE-A have precision snap-action micro-switches mounted, adjusted, and tested at our factory. The contact arrangement is single pole, double throw and can be wired for normally closed or normally open circuits. See separate instructions in micro-switch housing. A ½”-14 N.P.S.M. internally tapped connection is located at one end of the switch enclosure. Provision should be made to disconnect the switch from the conduit line when removing the cartridge assembly. Flexible conduit is recommended. Series AFS-A is equipped with a micro-switch suitable for applications where the splash of oil, water, or other coolants is present. Series ASFE-A has an explosion-proof switch listed by Underwriters’ Laboratories for use in hazardous atmosphere of Class I, Group C, and Group D; Class 11, Group E, Group F, and Group G.

4. Pressure Testing

CAUTION: Although the AF-A Series Firecheck is equipped with an o-ring seal (No. 15), we recommend you do not exceed 15 psig (1.05 KG/cm^2) or the pressure limit of other auxiliary equipment when pressure testing the system. Should leaks develop at the surfaces between the cartridge (No. 33) and the body (No. 40) and the cartridge and the bottom cover (No. 12), disassemble, clean machined surfaces, and re-grease with Essa “Andok B” or equivalent grease. Refer to *MAINTENANCE* section for correct assembly.

selas®

The Heat Technology Company™

Installation Cont.

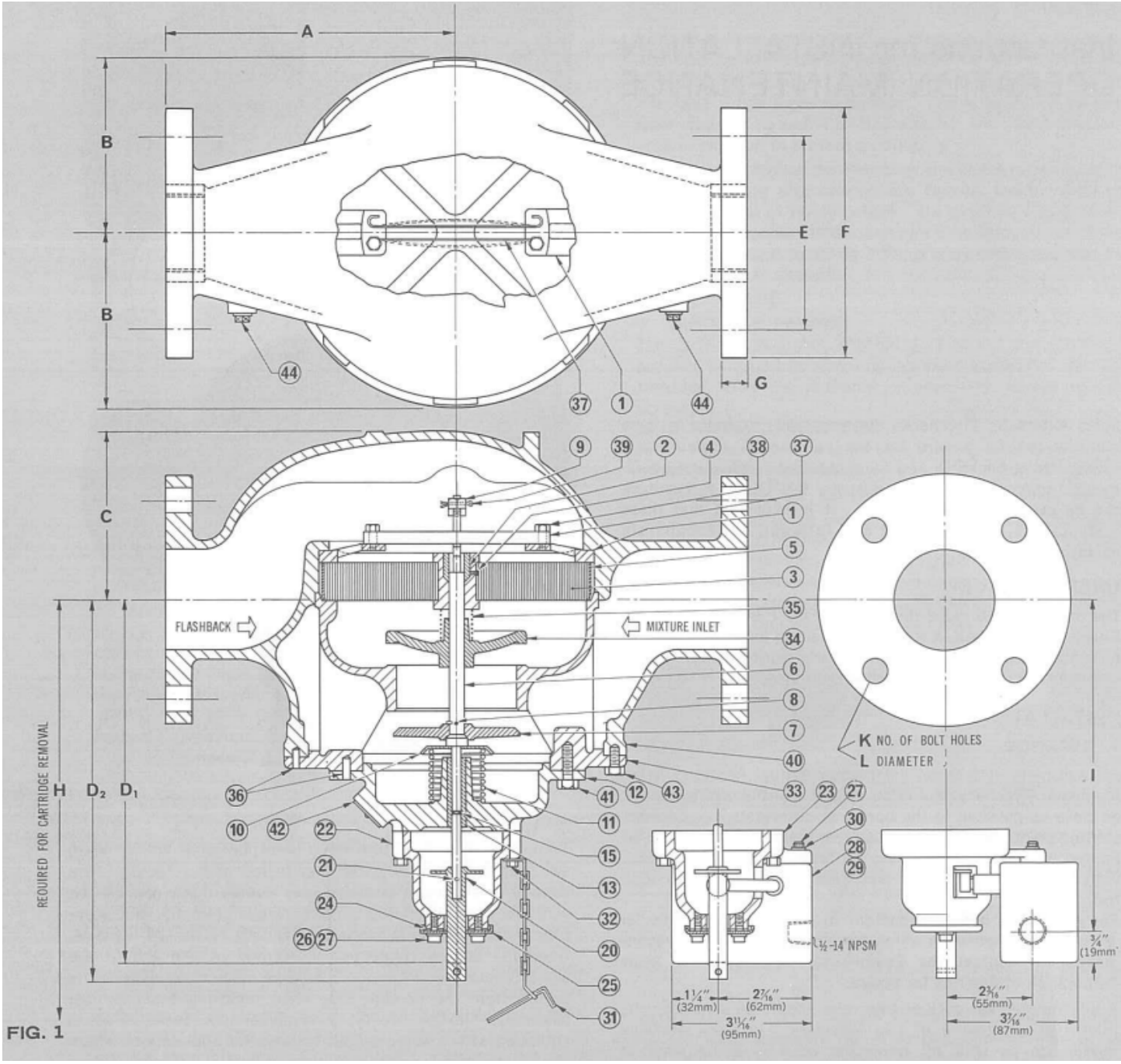

FIG. 1

The Heat Technology Company™

Installation Cont.

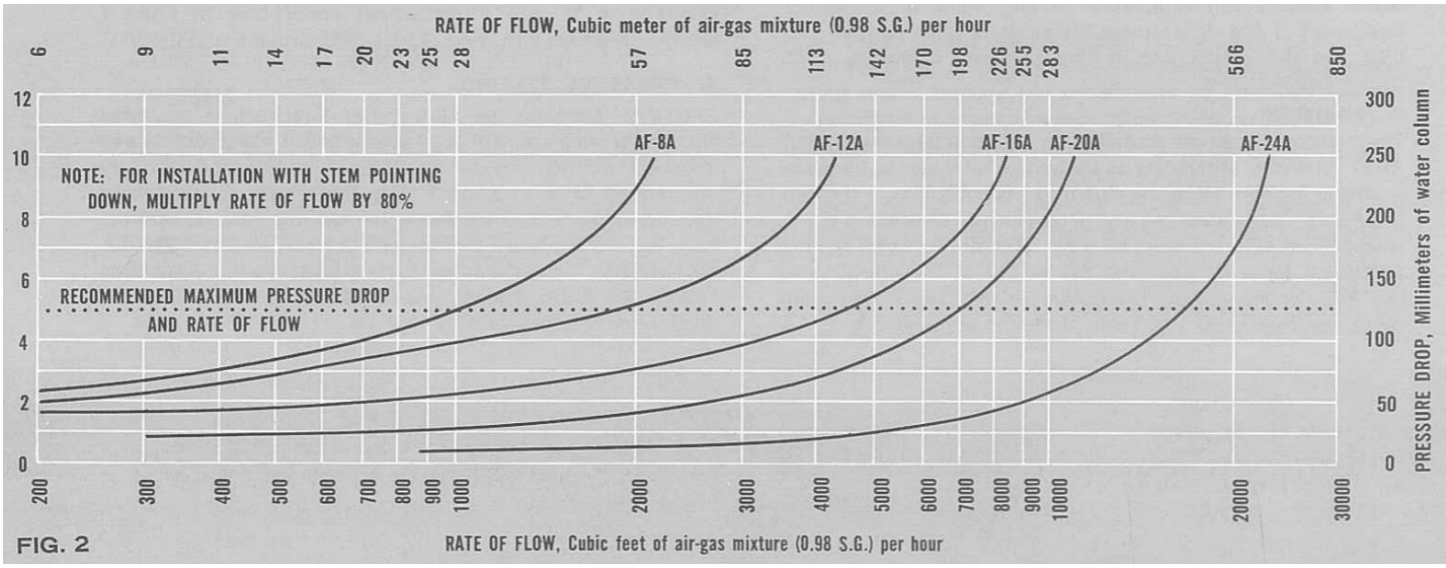

FIG. 2

INDEX NO.	NAME OF PART	NUMBER NEEDED ON AF-A	AFS-A	AFSE-A
1	Spool (Supplied as Sub-Assembly)	1	1	1
2	Bushing (Supplied as Sub-Assembly)	1	1	1
3	Screen (Supplied as Sub-Assembly)	1	1	1
4	Drive Screw (Supplied as Sub-Assembly)	1	1	1
5	Band (Supplied as Sub-Assembly)	1	1	1
6	Valve Stem	1	1	1
7	Valve Disc	1	1	1
8	Cotter Pin	1	1	1
9	Positioning Nut	1	1	1
10	Spring Socket	1	1	1
11	Spring	1	1	1
12	Bottom Cover	1	1	1
13	Bushing	1	1	1
‡15	"O"-Ring	1	1	1
20	Reset Stud Ass'y	1	1	1

INDEX NO.	NAME OF PART	NUMBER NEEDED ON AF-A	AFS-A	AFSE-A
21	3/32 x 7/16 Spring Pin	1	1	1
22	Cap	1	0	0
*23	Cap	0	1	1
24	TEST-SET Disc	1	1	1
25	Manual Test Disc	1	1	1
26	#10 Pattern Washer	2	2	2
27	#10-32 x 1/2 Soc. Hd. C.S.	2	4	4
*28	Micro Switch	0	1	0
*29	Micro Switch	0	0	1
*30	#10 Shakeproof Washer	0	2	2
31	Wrench Ass'y	1	1	1
32	1/4-20 x 1 Fil. Hd. C.S.	4	4	4

INDEX NO.	NAME OF PART	NUMBER NEEDED ON AF-A	AFS-A	AFSE-A
33	Cartridge	1	1	1
34	Check Valve	1	1	1
35	Spring	1	1	1
36	3/16 x 5/8 Spring Pin	2	2	2
‡37	Bimetal Strip	2	2	2
38	Strip Holder Screw	4	4	4
39	Cotter Pin	1	1	1
40	Body	1	1	1
41	Hex Head Machine Screw	See B/M		
42	Nameplate	1	1	1
43	Hex Head Machine Screw	See B/M		
44	1/8 Pipe Plug	2	2	2

‡ Recommended spare parts
* Required to convert AF-A to AFS-A

selas®

The Heat Technology Company™

Installation Cont.

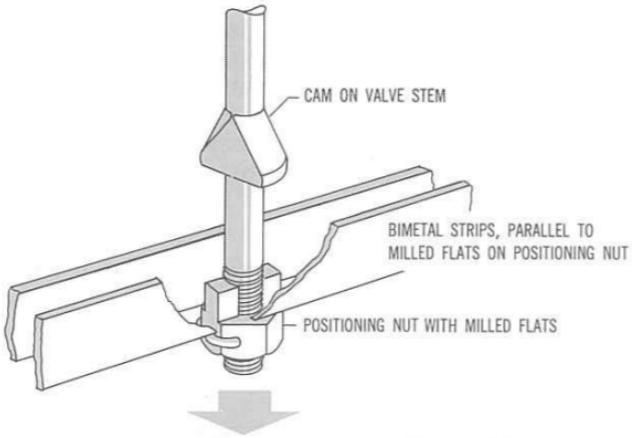

FIG. 3a
ASSEMBLY VERTICALLY DOWN

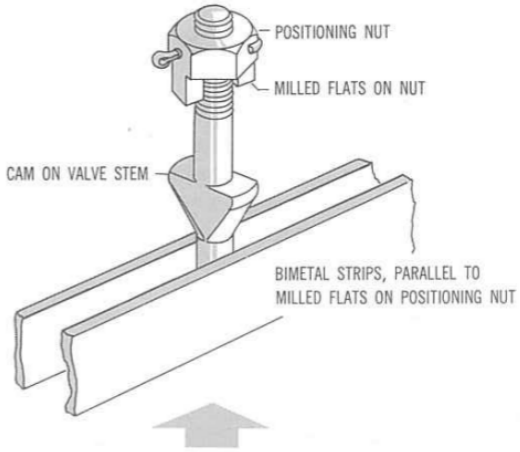

FIG. 3 b
ASSEMBLY VERTICALLY UP OR HORIZONTALLY

Dimensions

Catalog Number	Part Number	Pipe Size	A	B	C	D1	D2	E	F	G	H	I	K	L
AF-8A AFS-8A AFSE-8A	75374-01 75374-02 75374-03	1”	4-1/2” 115	3-1/4” 83	3-1/2” 89	8-3/4” 222	9-1/4” 235	---	---	---	15” 381	7-5/8” 194	---	---
AF-12A AFS-12A AFSE-12A	75375-01 75375-02 75375-03	1-1/2”	5-1/2” 140	3-5/8” 92	3-11/16” 94	9-1/2” 242	10-1/8” 257	---	---	---	16” 406	8-1/2” 216	---	---
AF-16A AFS-16A AFSE-16A	75376-01 75376-02 75376-03	2”	6-3/4” 172	4-1/8” 105	4-1/8” 105	9-1/2” 242	10-1/8” 257	4-3/4” 121	6” 153	5/8” 16	16” 406	8-1/2” 216	4	3/4” 19
AF-20A AFS-20A AFSE-20A	75377-01 75377-02 75377-03	2-1/2”	8” 204	4-3/4” 121	4-3/4” 121	10” 254	10-5/8” 270	5-1/2” 140	7” 178	11/16” 18	18” 457	9” 229	4	3/4” 19
AF-24A AFS-24A AFSE-24A	71186-01 71186-02 71186-03	3”	9-1/2” 242	5-13/16” 148	6-5/8” 168	11-3/4” 299	12-5/8” 321	6” 153	7-1/2” 191	15/16” 24	20” 508	10-3/4” 273	4	3/4” 19

AF: Automatic Firecheck without micro switch
AFS: Automatic Firecheck with enclosed micro switch
AFSE: Automatic Firecheck with explosion-proof micro switch

selas®

The Heat Technology Company™

Operation

1. Initial Setting

To prepare the Firecheck for normal operation, TEST-SET disc (No. 24) must be in the SET position (See Fig. 4). Insert wrench (No. 31) through hole in reset stud (No. 20) and pull. This will cock valve disc (No. 7) in the open position.

2. Function

When backfire occurs in piping protected by the Firecheck, any resulting shock wave will immediately close the check valve (No. 34) as the impulse moves upstream. Combustion will be arrested by the cooling effect of the wound metallic screen (No. 3) above which the flame is held. While burning at this point, the flame heats the bimetal strips (No. 37) which move to the dotted position shown on the top view in Fig. 1. This releases the spring-loaded valve stem (No. 6), causing valve disc to shut off mixture supply, thereby extinguishing flame. If a switch (No. 28 or 29) is attached to the Firecheck, it will function when the valve closes to sound alarms, turn off a combustion controller, or perform other intended operations. Series AF-A can be converted to employ a switch by replacing cap (No. 22) with cap (No. 23), which has provisions for mounting-switch.

3. Resetting

After a backfire, and before resetting the Firecheck, close the gas cock on the upstream side and examine the combustion system to determine and correct the cause of backfire. When the bimetal strips have cooled, insert wrench through hole in reset stud and pull to reset the Firecheck. If the reset stud fails to remain in the extended position, check the bimetal strips for possible damage. Distortion of any kind or discoloration due to overheating (light blue to blue black in color) will require the installation of new bimetal strips. Damaged or distorted bimetal strips must be replaced. Refer to *MAINTENANCE* section for correct assembly. After the Firecheck has been correctly reassembled, it can be reset by pulling out reset stud, which will cock valve disc in the open position. The Firecheck is now ready for operation, and burners may be relighted according to normal procedure.

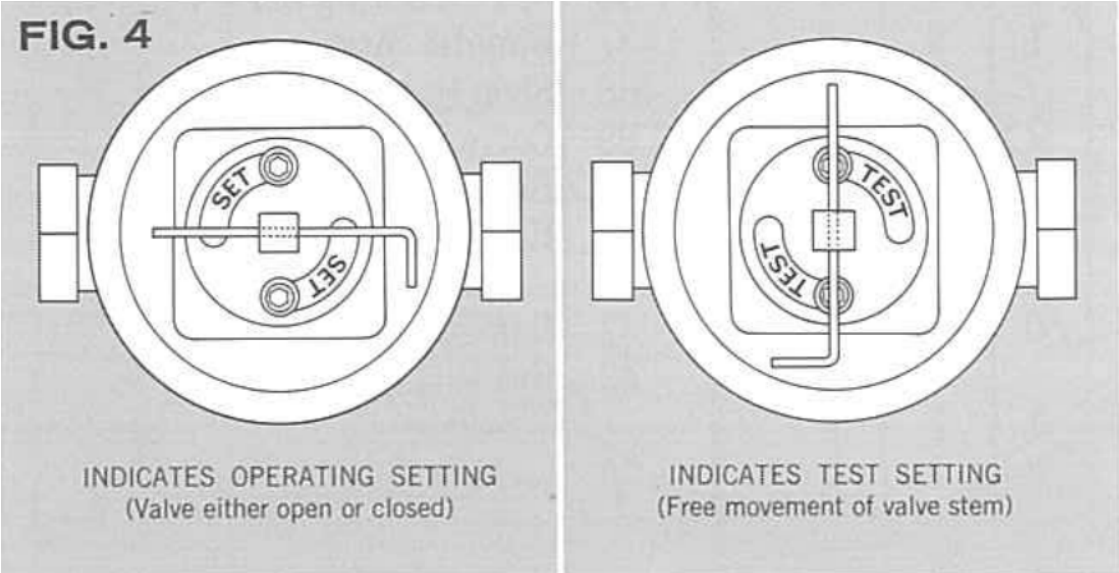

The Heat Technology Company™

Testing

It is important that all tests for proper operation of the Firechecks (except for pressure loss) be made without gas-air mixture in the piping. Monthly tests are recommended for determining freedom of valve movement. These tests are made by loosening the two socket head cap screws (No. 27), which hold the manual test disc (No. 25) secure; and turning disc as far as slots will allow to TEST position, whereupon the valve should snap shut. If the valve is sluggish or fails to shut, the valve stem (No. 6) and screen bushing (No. 2) should be cleaned and the test repeated. After a satisfactory test, the manual test disc must be returned to the SET position and locked by tightening the two socket head cap screws. The valve is now ready to be reset. Check clearance between reset stud and TEST-SET disc. Sufficient clearance is required to prevent binding.

Pressure loss through the Firecheck can be measured by using the two plugged pipe connections (No. 44), located near the inlet and outlet of the Firecheck. The graph in Fig. 2 should be used as a guide. If the pressure drop through the device exceeds the graph values by 50%, it is recommended that the screen (No. 3) be cleaned.

Maintenance

1. Cartridge Removal

The cartridge assembly, consisting of Nos. 1 through 39, is removed as a unit by removing hex head screws (No. 41). Two threaded holes are available, if necessary, to use as jack screws.

2. Cleaning the Screen

Rinse the screen thoroughly in a solvent, blow through with compressed air, then wipe dry.

3. Inspection or Replacement of Bimetal Strips

Inspect bimetal strips periodically. More frequent inspections will be required if repeated or violent backfires occur. Sharp edges and burrs must be removed (Fig. 5) since these may cause defective operation and binding of the valve stem. Bimetal strips distorted or discolored (lite blue to blue black) due to overheating, must be replaced.

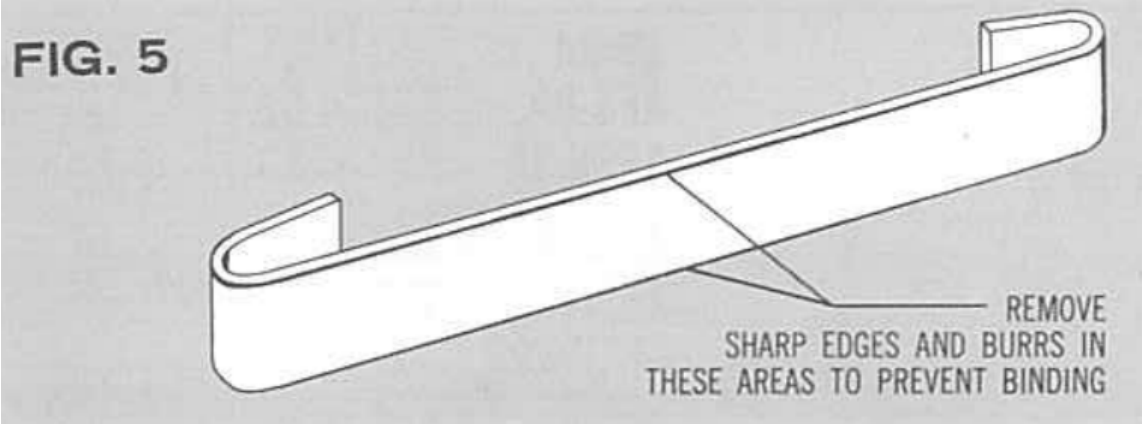

selas®

The Heat Technology Company™

Reassembly

1. Cleaning

Flange surfaces on cartridge (No. 33) and Bottom Cover (No. 12) must be cleaned and then coated with Essa “Andok B” or equivalent grease. All internal parts must be clean and dry, free from grease.

2. Positioning of Bimetals

Fig. 1 shows the correct positioning of bimetals and their assembly to the screen spool assembly (No. 1). Move TEST-SET disc to the SET position. Rotate screen spool assembly so that bimetals are parallel to milled flats on positioning nut (No. 9). Angular deviations of plus or minus 20° will not affect the operation of the valve.

2a. Vertically Down (Refer to Fig. 3a)

Bimetals will rest on positioning nut, parallel with and straddling the milled flats on the nut. Insert the cartridge and locate the bolt holes. With screws (No. 41), bolt the cartridge assembly to valve body (No. 40).

2b. Vertically Up of Horizontally (Refer to Fig. 3b)

Bimetals are parallel with the milled flats on the positioning nut and below the cam on valve stem (Screen spool assembly is seated in cartridge). Insert the cartridge assembly in the valve body and fasten with screws. Pull out reset stud to set the Firecheck.

11012 Aurora Hudson Rd • Streetsboro, OH 44241
1-800-523-6500 • sales@selas.com
www.selas.com

The Heat Technology Company™

Selas Automatic Firecheck - 1” Size

Individual parts no longer available - must purchase kit

Screen Assembly Kit

Part #: 143396-01

Parts	Index #	Part #	Qty
Screen Assembly	1-5	53466-01	1
Positioning Nut	9	56954-01	1
Check Valve	34	53462-01	1
Check Valve Spring	35	53464-01	1
Bi-Metal Strip Set	37	3586-12	1
Stripholder Screw	38	3577-11	4
Cotter Pin	39	952022-22	1
Grease		953050-01	1

Bottom Cover Assembly Kit

Part #: 143397-01

Parts	Index #	Part #	Qty
Valve Stem	6	75427-01	1
Valve Disc	7	53460-01	1
Cotter Pin	8	952022-22	1
Spring Socket	10	52983-01	1
Spring	11	18257-01	1
Bottom Cvr/Bushing	12, 13	75425-02	1
O-Ring	15	66248-07	1
Reset Stud Assy	20	52832-01	1
Spring Pin	21	952031-39	1
Grease		953050-01	1

Std Switch Assembly Kit

Part #: 143398-01

Parts	Index #	Part #	Qty
Cap	23	45874-01	1
Test Set Disc	24	32475-01	1
Manual Test Disk	25	11833-01	1
Washer	26	952017-05	2
Screw	27	951462-03	4
Microswitch	28	53777-01	1
Washer	30	952015-07	2
Wrench Assy	31	53008-01	1
Screw	32	951056-09	4
Nameplate	42	54403-01	1
Caution Nameplate	47	128424-02	1

Ex-Prf Switch Assembly Kit

Part #: 143399-01

Parts	Index #	Part #	Qty
Cap	23	45874-01	1
Test Set Disc	24	32475-01	1
Manual Test Disk	25	11833-01	1
Washer	26	952017-05	2
Screw	27	951462-03	4
Ex-Prf Microswitch	29	53777-02	1
Washer	30	952015-07	2
Wrench Assy	31	53008-01	1
Screw	32	951056-09	4
Nameplate	42	54403-01	1
Caution Nameplate	47	128424-02	1

11012 Aurora Hudson Rd • Streetsboro, OH 44241

1-800-523-6500 • sales@selas.com

www.selas.com

The Heat Technology Company™

Selas Automatic Firecheck - 1.5” Size

Individual parts no longer available - must purchase kit

Screen Assembly Kit

Part #: 143400-01

Parts	Index #	Part #	Qty
Screen Assembly	1-5	53630-01	1
Positioning Nut	9	56954-01	1
Check Valve	34	53472-01	1
Check Valve Spring	35	53474-01	1
Bi-Metal Strip Set	37	3586-13	1
Stripholder Screw	38	3577-11	4
Cotter Pin	39	952022-22	1
Grease		953050-01	1

Bottom Cover Assembly Kit

Part #: 143401-01

Parts	Index #	Part #	Qty
Valve Stem	6	75428-01	1
Valve Disc	7	53471-01	1
Cotter Pin	8	952022-22	1
Spring Socket	10	52983-01	1
Spring	11	18257-01	1
Bottom Cvr/Bushing	12, 13	75425-02	1
O-Ring	15	66248-07	1
Reset Stud Assy	20	52832-01	1
Spring Pin	21	952031-39	1
Grease		953050-01	1

Std Switch Assembly Kit

Part #: 143402-01

Parts	Index #	Part #	Qty
Cap	23	45874-01	1
Test Set Disc	24	32475-01	1
Manual Test Disk	25	11833-01	1
Washer	26	952017-05	2
Screw	27	951462-03	4
Microswitch	28	53777-01	1
Washer	30	952015-07	2
Wrench Assy	31	53008-01	1
Screw	32	951056-09	4
Nameplate	42	54404-01	1
Caution Nameplate	47	128424-02	1

Ex-Prf Switch Assembly Kit

Part #: 143403-01

Parts	Index #	Part #	Qty
Cap	23	45874-01	1
Test Set Disc	24	32475-01	1
Manual Test Disk	25	11833-01	1
Washer	26	952017-05	2
Screw	27	951462-03	4
Ex-Prf Microswitch	29	53777-02	1
Washer	30	952015-07	2
Wrench Assy	31	53008-01	1
Screw	32	951056-09	4
Nameplate	42	54404-01	1
Caution Nameplate	47	128424-02	1

11012 Aurora Hudson Rd • Streetsboro, OH 44241

1-800-523-6500 • sales@selas.com

www.selas.com

selas®

The Heat Technology Company™

Selas Automatic Firecheck - 2” Size

Individual parts no longer available - must purchase kit

Screen Assembly Kit

Part #: 143404-01

Parts	Index #	Part #	Qty
Screen Assembly	1-5	53627-01	1
Positioning Nut	9	56954-01	1
Check Valve	34	53472-01	1
Check Valve Spring	35	53474-01	1
Bi-Metal Strip Set	37	3586-13	1
Stripholder Screw	38	3577-11	4
Cotter Pin	39	952022-22	1
Grease		953050-01	1

Bottom Cover Assembly Kit

Part #: 143405-01

Parts	Index #	Part #	Qty
Valve Stem	6	75428-01	1
Valve Disc	7	53471-01	1
Cotter Pin	8	952022-22	1
Spring Socket	10	52983-01	1
Spring	11	18257-01	1
Bottom Cvr/Bushing	12, 13	75425-02	1
O-Ring	15	66248-07	1
Reset Stud Assy	20	52832-01	1
Spring Pin	21	952031-39	1
Grease		953050-01	1

Std Switch Assembly Kit

Part #: 143398-01

Parts	Index #	Part #	Qty
Cap	23	45874-01	1
Test Set Disc	24	32475-01	1
Manual Test Disk	25	11833-01	1
Washer	26	952017-05	2
Screw	27	951462-03	4
Microswitch	28	53777-01	1
Washer	30	952015-07	2
Wrench Assy	31	53008-01	1
Screw	32	951056-09	4
Nameplate	42	54405-01	1
Caution Nameplate	47	128424-02	1

Ex-Prf Switch Assembly Kit

Part #: 143399-01

Parts	Index #	Part #	Qty
Cap	23	45874-01	1
Test Set Disc	24	32475-01	1
Manual Test Disk	25	11833-01	1
Washer	26	952017-05	2
Screw	27	951462-03	4
Ex-Prf Microswitch	29	53777-02	1
Washer	30	952015-07	2
Wrench Assy	31	53008-01	1
Screw	32	951056-09	4
Nameplate	42	54405-01	1
Caution Nameplate	47	128424-02	1

11012 Aurora Hudson Rd • Streetsboro, OH 44241

1-800-523-6500 • sales@selas.com

www.selas.com

selas®

The Heat Technology Company™

Selas Automatic Firecheck - 2.5” Size

Individual parts no longer available - must purchase kit

Screen Assembly Kit

Part #: 143408-01

Parts	Index #	Part #	Qty
Screen Assembly	1-5	46924-01	1
Positioning Nut	9	56954-01	1
Check Valve	34	45875-01	1
Check Valve Spring	35	45868-01	1
Bi-Metal Strip Set	37	5766-01	1
Stripholder Screw	38	3577-11	4
Cotter Pin	39	952022-22	1
Grease		953050-01	1

Bottom Cover Assembly Kit

Part #: 143409-01

Parts	Index #	Part #	Qty
Valve Stem	6	75429-01	1
Valve Disc	7	45867-01	1
Cotter Pin	8	952022-22	1
Spring Socket	10	52983-01	1
Spring	11	5770-01	1
Bottom Cvr/Bushing	12, 13	73822-02	1
O-Ring	15	66248-07	1
Reset Stud Assy	20	52832-01	1
Spring Pin	21	952031-39	1
Grease		953050-01	1

Std Switch Assembly Kit

Part #: 143410-01

Parts	Index #	Part #	Qty
Cap	23	45874-01	1
Test Set Disc	24	32475-01	1
Manual Test Disk	25	11833-01	1
Washer	26	952017-05	2
Screw	27	951462-03	4
Microswitch	28	53777-01	1
Washer	30	952015-07	2
Wrench Assy	31	53008-01	1
Screw	32	951056-09	4
Nameplate	42	53895-01	1
Caution Nameplate	47	128424-02	1

Ex-Prf Switch Assembly Kit

Part #: 143411-01

Parts	Index #	Part #	Qty
Cap	23	45874-01	1
Test Set Disc	24	32475-01	1
Manual Test Disk	25	11833-01	1
Washer	26	952017-05	2
Screw	27	951462-03	4
Ex-Prf Microswitch	29	53777-02	1
Washer	30	952015-07	2
Wrench Assy	31	53008-01	1
Screw	32	951056-09	4
Nameplate	42	53895-01	1
Caution Nameplate	47	128424-02	1

11012 Aurora Hudson Rd • Streetsboro, OH 44241

1-800-523-6500 • sales@selas.com

www.selas.com

selas®

The Heat Technology Company™

Selas Automatic Firecheck - 3” Size

Individual parts no longer available - must purchase kit

Screen Assembly Kit

Part #: 143412-01

Parts	Index #	Part #	Qty
Screen Assembly	1-5	71184-01	1
Positioning Nut	9	73976-01	1
Check Valve	34	53641-01	1
Check Valve Spring	35	53643-01	1
Bi-Metal Strip Set	37	5766-01	1
Stripholder Screw	38	3577-11	4
Cotter Pin	39	952022-22	1
Grease		953050-01	1

Bottom Cover Assembly Kit

Part #: 143413-01

Parts	Index #	Part #	Qty
Valve Stem	6	53642-01	1
Valve Disc	7	53640-01	1
Cotter Pin	8	952022-23	1
Spring Socket	10	52983-01	1
Spring	11	5770-01	1
Bottom Cvr/Bushing	12, 13	73822-02	1
O-Ring	15	66248-07	1
Reset Stud Assy	20	52832-01	1
Spring Pin	21	952031-39	1
Grease		953050-01	1

Std Switch Assembly Kit

Part #: 143414-01

Parts	Index #	Part #	Qty
Cap	23	45874-01	1
Test Set Disc	24	32475-01	1
Manual Test Disk	25	11833-01	1
Washer	26	952017-05	2
Screw	27	951462-03	4
Microswitch	28	53777-01	1
Washer	30	952015-07	2
Wrench Assy	31	53008-01	1
Screw	32	951056-09	4
Nameplate	42	54406-01	1
Caution Nameplate	47	128424-02	1

Ex-Prf Switch Assembly Kit

Part #: 143415-01

Parts	Index #	Part #	Qty
Cap	23	45874-01	1
Test Set Disc	24	32475-01	1
Manual Test Disk	25	11833-01	1
Washer	26	952017-05	2
Screw	27	951462-03	4
Ex-Prf Microswitch	29	53777-02	1
Washer	30	952015-07	2
Wrench Assy	31	53008-01	1
Screw	32	951056-09	4
Nameplate	42	54406-01	1
Caution Nameplate	47	128424-02	1

11012 Aurora Hudson Rd • Streetsboro, OH 44241

1-800-523-6500 • sales@selas.com

www.selas.com

The Heat Technology Company™